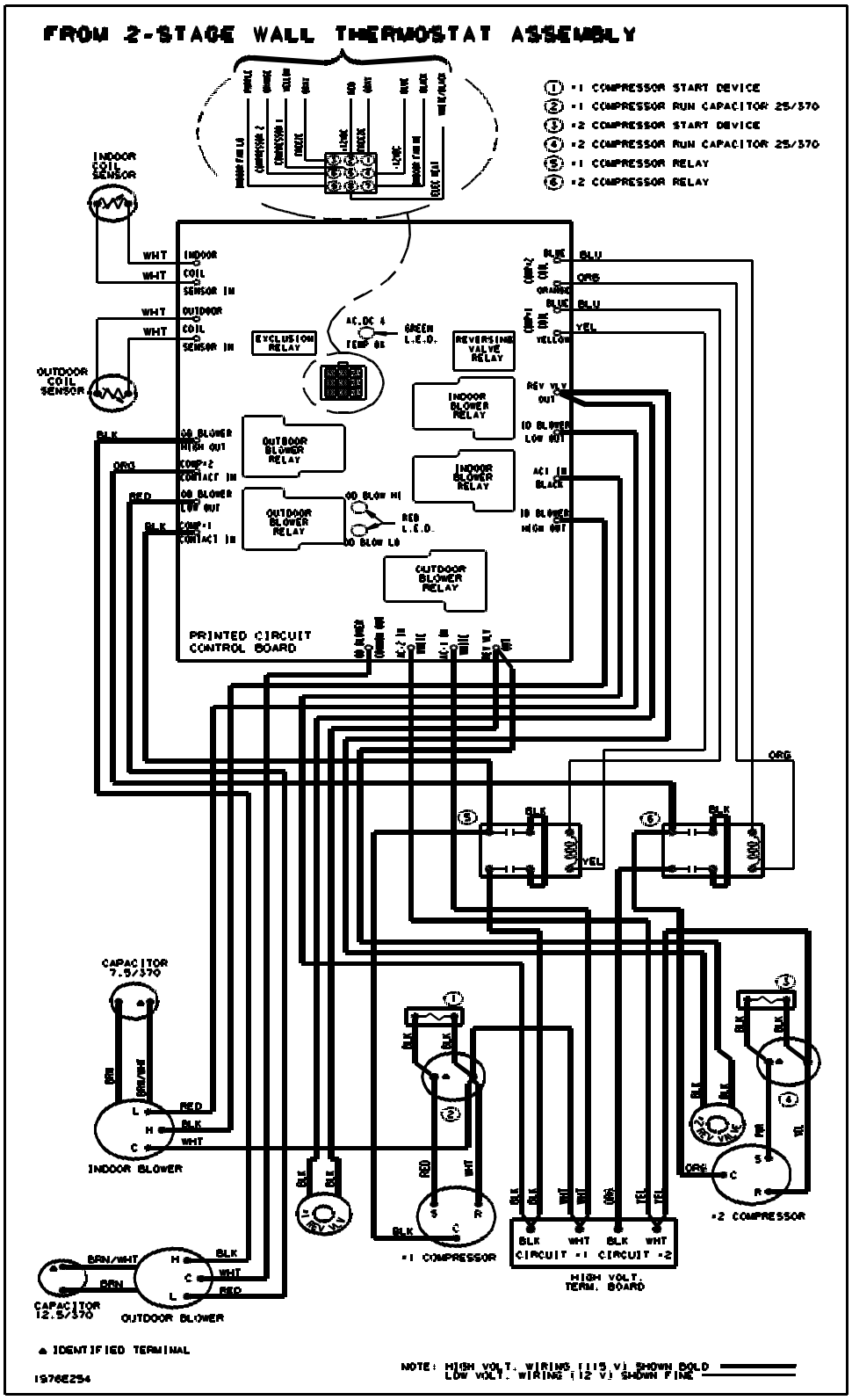
FROM 2-STAGE WALL THERMOSTAT ASSEMBLY
① •1 COMPRESSOR START DEVICE
② •1 COMPRESSOR RUN CAPACITOR 25/370
③ •2 COMPRESSOR START DEVICE
④ •2 COMPRESSOR RUN CAPACITOR 25/370
⑤ •1 COMPRESSOR RELAY
⑥ •2 COMPRESSOR RELAY
INDOOR COIL SENSOR
OUTDOOR COIL SENSOR
INDOOR COIL SENSOR IN
OUTDOOR COIL SENSOR IN
EXCLUSION RELAY
REVERSING VALVE RELAY
INDOOR BLOWER RELAY
OUTDOOR BLOWER RELAY
GREEN L.E.D.
RED L.E.D.
PRINTED CIRCUIT CONTROL BOARD
CAPACITOR 7.5/370
INDOOR BLOWER
CAPACITOR 12.5/370
OUTDOOR BLOWER
•1 COMPRESSOR
•2 COMPRESSOR
HIGH VOLT. TERM. BOARD
CIRCUIT •1 CIRCUIT •2
▲ IDENTIFIED TERMINAL
NOTE: HIGH VOLT. WIRING (115 V) SHOWN BOLD
LOW VOLT. WIRING (12 V) SHOWN FINE
1976E254