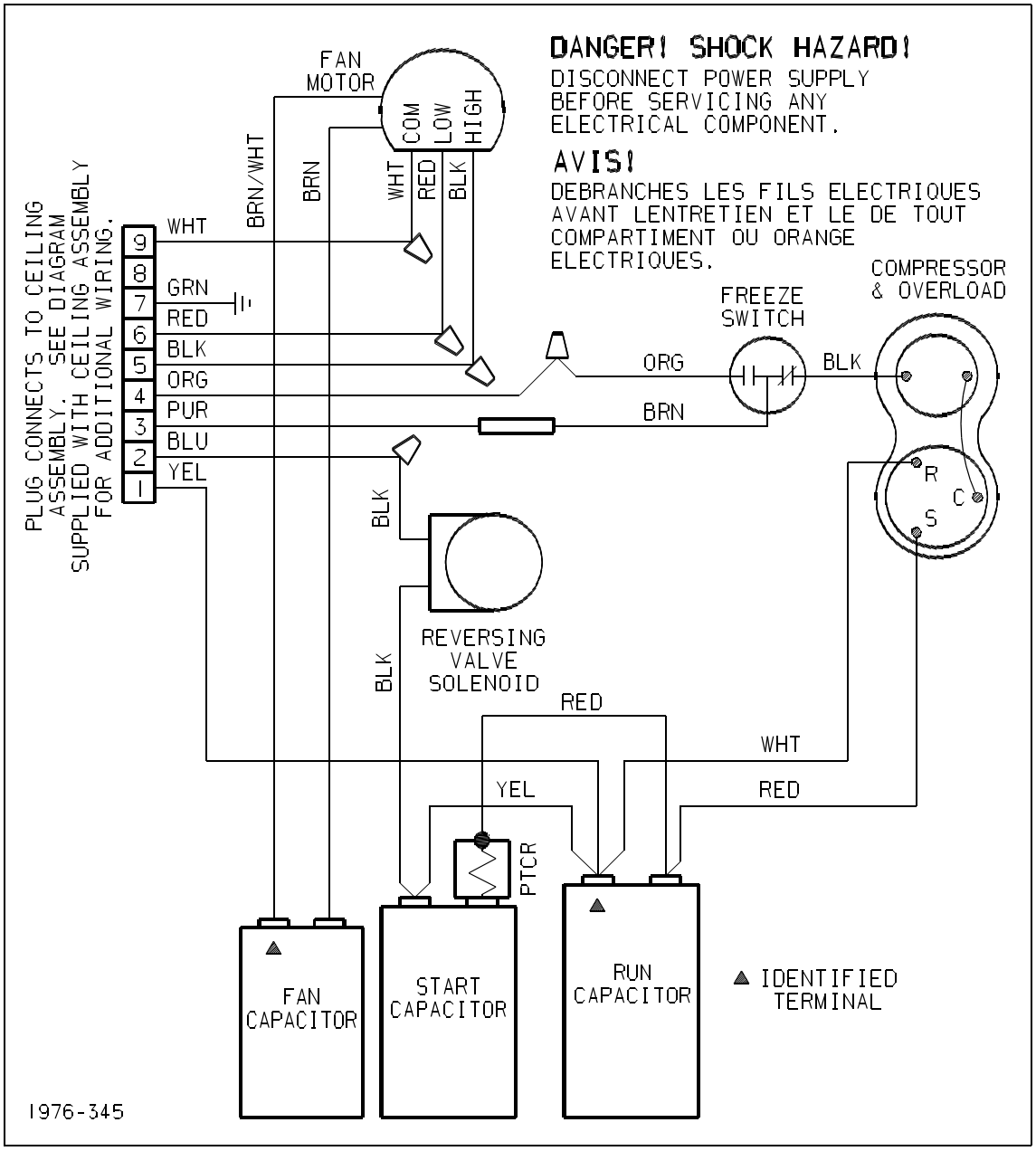
DANGER! SHOCK HAZARD!
DISCONNECT POWER SUPPLY BEFORE SERVICING ANY ELECTRICAL COMPONENT.
AVIS!
DEBRANCHES LES FILS ELECTRIQUES AVANT LENTRETIEN ET LE DE TOUT COMPARTIMENT OU ORANGE ELECTRIQUES.
FAN MOTOR
COM
LOW
HIGH
BRN/WHT
BRN
WHT
RED
BLK
PLUG CONNECTS TO CEILING ASSEMBLY. SEE DIAGRAM SUPPLIED WITH CEILING ASSEMBLY FOR ADDITIONAL WIRING.
9
8
7
6
5
4
3
2
1
WHT
GRN
RED
BLK
ORG
PUR
BLU
YEL
FREEZE SWITCH
COMPRESSOR & OVERLOAD
ORG
BLK
BRN
R
C
S
BLK
BLK
REVERSING VALVE SOLENOID
RED
WHT
YEL
RED
PTCR
FAN CAPACITOR
START CAPACITOR
RUN CAPACITOR
IDENTIFIED TERMINAL
1976-345