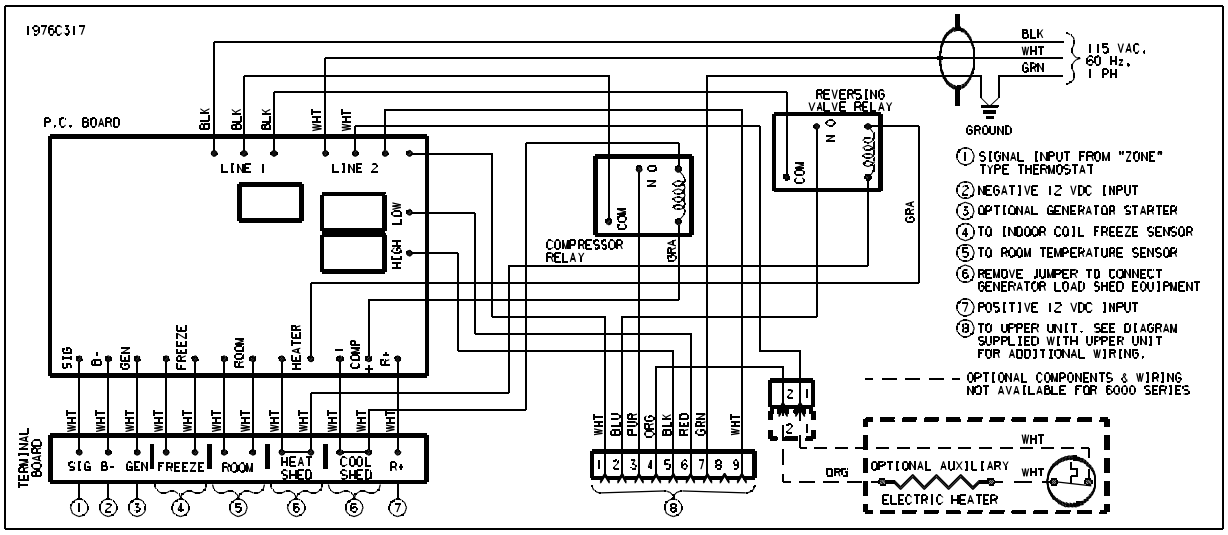
1976C317
P.C. BOARD
BLK
BLK
BLK
WHT
WHT
LINE 1
LINE 2
LOW
HIGH
SIG
B-
GEN
FREEZE
ROOM
HEATER
I
COMP
+
R+
TERMINAL BOARD
WHT
SIG B- GEN FREEZE ROOM HEAT SHED COOL SHED R+
COMPRESSOR RELAY
COM
N O
GRA
REVERSING VALVE RELAY
COM
N O
GRA
BLK
WHT
GRN
115 VAC, 60 Hz, 1 PH
GROUND
WHT BLU PUR ORG BLK RED GRN WHT
1 2 3 4 5 6 7 8 9
2 1
12
ORG
OPTIONAL AUXILIARY
ELECTRIC HEATER
WHT
WHT
1 SIGNAL INPUT FROM "ZONE" TYPE THERMOSTAT
2 NEGATIVE 12 VDC INPUT
3 OPTIONAL GENERATOR STARTER
4 TO INDOOR COIL FREEZE SENSOR
5 TO ROOM TEMPERATURE SENSOR
6 REMOVE JUMPER TO CONNECT GENERATOR LOAD SHED EQUIPMENT
7 POSITIVE 12 VDC INPUT
8 TO UPPER UNIT. SEE DIAGRAM SUPPLIED WITH UPPER UNIT FOR ADDITIONAL WIRING.
OPTIONAL COMPONENTS & WIRING NOT AVAILABLE FOR 6000 SERIES