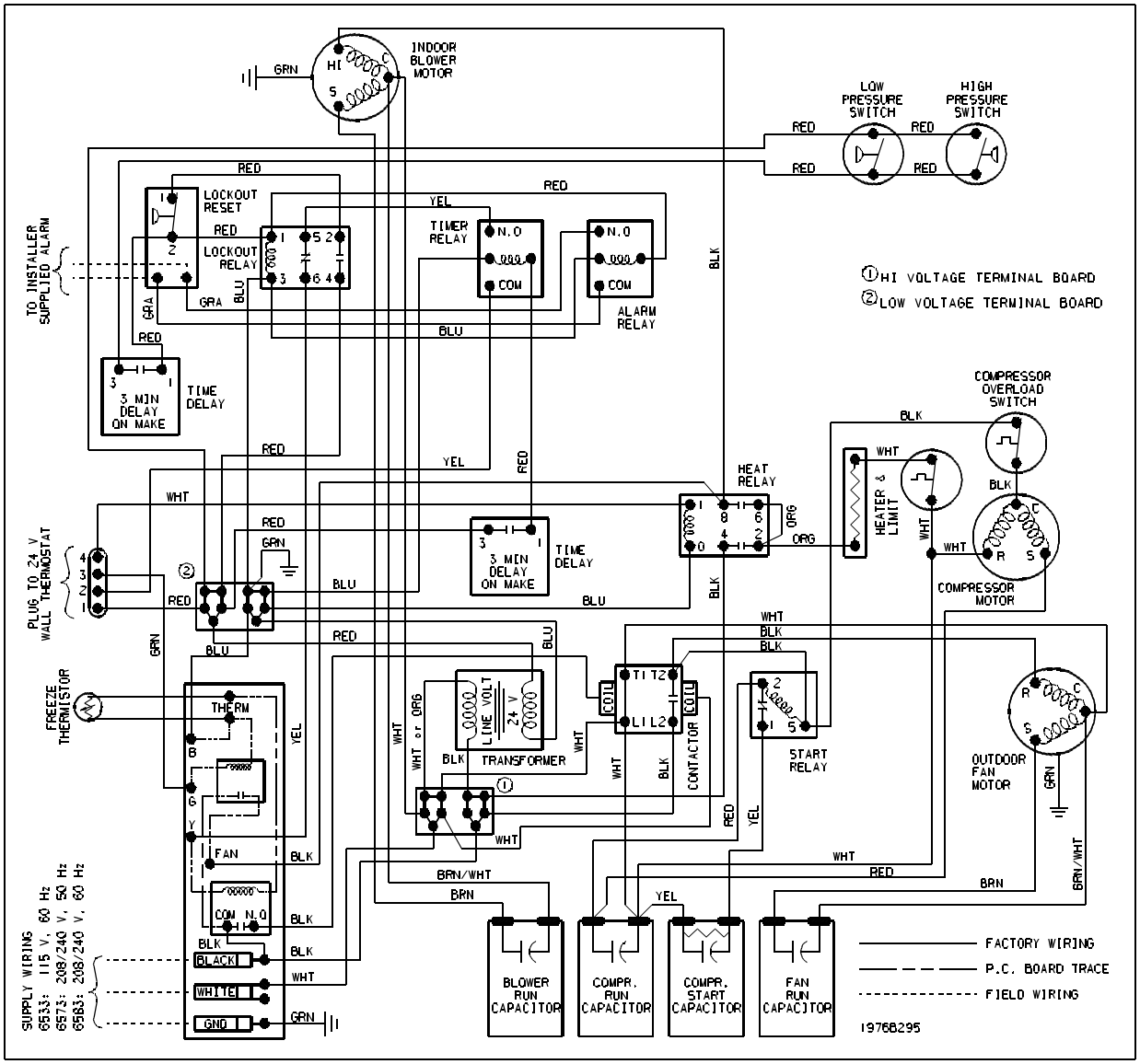
INDOOR BLOWER MOTOR
HI
C
S
GRN
LOW PRESSURE SWITCH
HIGH PRESSURE SWITCH
RED
LOCKOUT RESET
LOCKOUT RELAY
TIMER RELAY
N.O
COM
ALARM RELAY
YEL
BLU
GRA
BLK
TO INSTALLER SUPPLIED ALARM
① HI VOLTAGE TERMINAL BOARD
② LOW VOLTAGE TERMINAL BOARD
3 MIN DELAY ON MAKE
TIME DELAY
COMPRESSOR OVERLOAD SWITCH
HEAT RELAY
ORG
HEATER & LIMIT
WHT
COMPRESSOR MOTOR
PLUG TO 24 V WALL THERMOSTAT
FREEZE THERMISTOR
THERM
B
G
Y
FAN
COIL
TRANSFORMER
LINE VOLT
24 V
WHT or ORG
CONTACTOR
START RELAY
OUTDOOR FAN MOTOR
BRN/WHT
BRN
SUPPLY WIRING
6533: 115 V, 60 Hz
6573: 208/240 V, 50 Hz
6583: 208/240 V, 60 Hz
BLACK
WHITE
GND
BLOWER RUN CAPACITOR
COMPR. RUN CAPACITOR
COMPR. START CAPACITOR
FAN RUN CAPACITOR
FACTORY WIRING
P.C. BOARD TRACE
FIELD WIRING
19768295