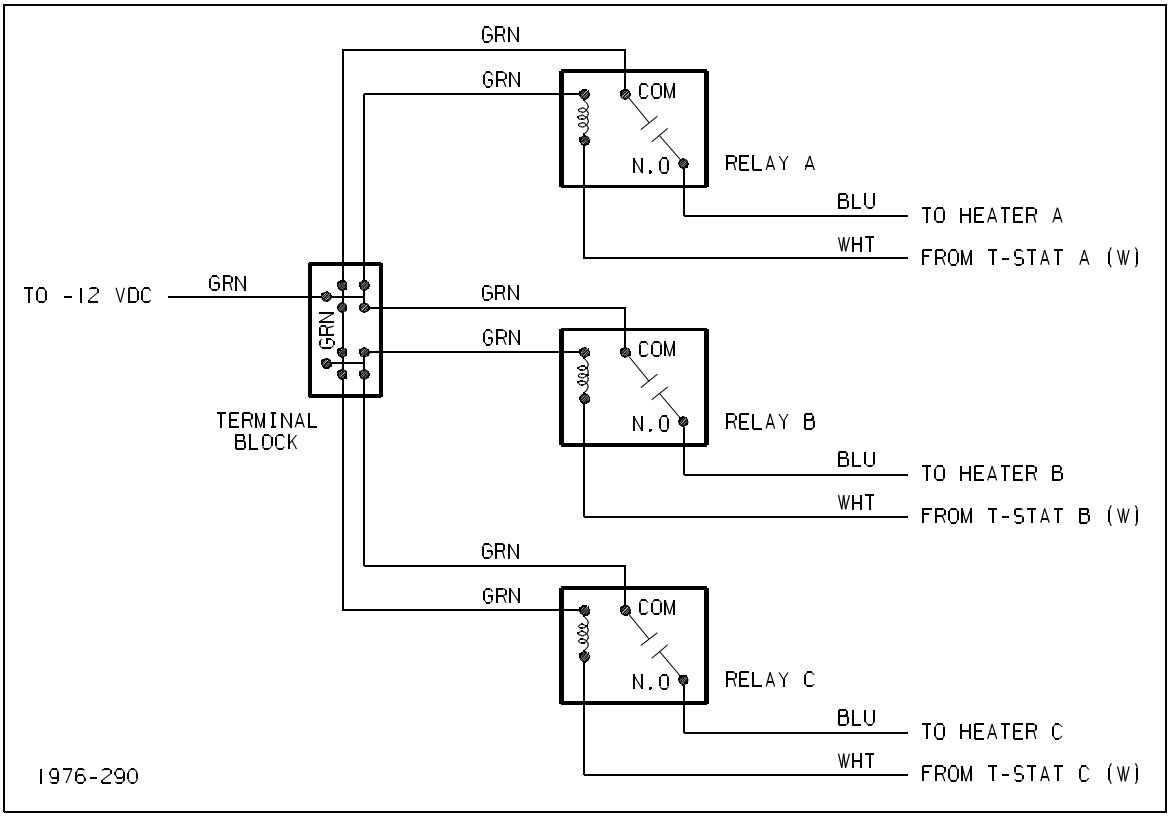
GRN
GRN
COM
N.O
RELAY A
BLU
TO HEATER A
WHT
FROM T-STAT A (W)
TO -12 VDC
GRN
GRN
GRN
GRN
COM
N.O
RELAY B
TERMINAL
BLOCK
BLU
TO HEATER B
WHT
FROM T-STAT B (W)
GRN
GRN
COM
N.O
RELAY C
BLU
TO HEATER C
WHT
FROM T-STAT C (W)
1976-290