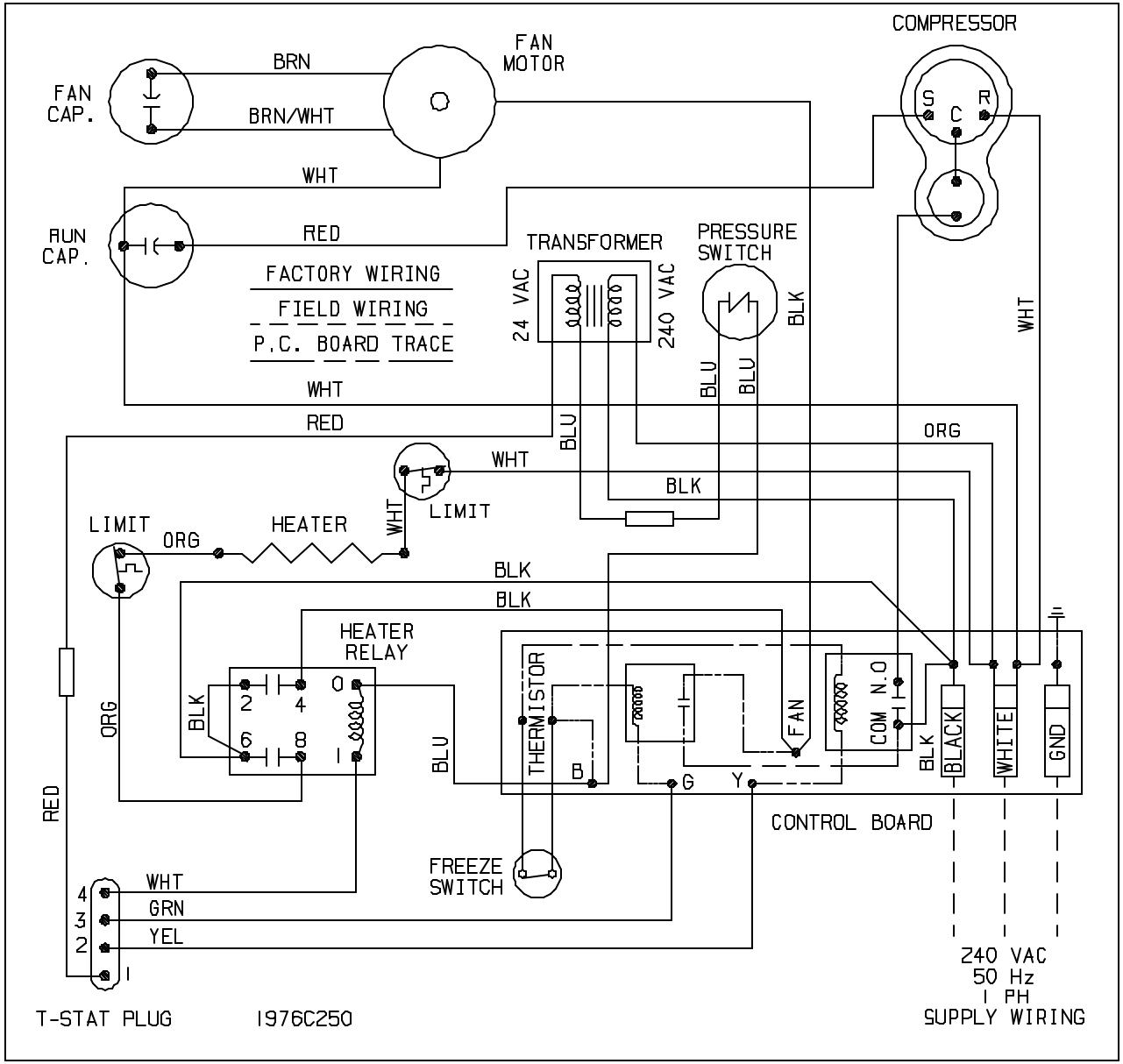
COMPRESSOR
FAN MOTOR
FAN CAP.
BRN
BRN/WHT
WHT
RUN CAP.
RED
S
C
R
TRANSFORMER
PRESSURE SWITCH
24 VAC
240 VAC
BLK
WHT
FACTORY WIRING
FIELD WIRING
P.C. BOARD TRACE
BLU
BLU
WHT
RED
BLU
ORG
WHT
BLK
LIMIT
WHT
LIMIT
ORG
HEATER
BLK
BLK
HEATER RELAY
THERMISTOR
FAN
COM N.O
BLK
BLACK
WHITE
GND
ORG
BLK
2
4
6
8
0
BLU
B
G
Y
CONTROL BOARD
RED
FREEZE SWITCH
WHT
GRN
YEL
4
3
2
1
240 VAC
50 Hz
1 PH
SUPPLY WIRING
T-STAT PLUG
1976C250